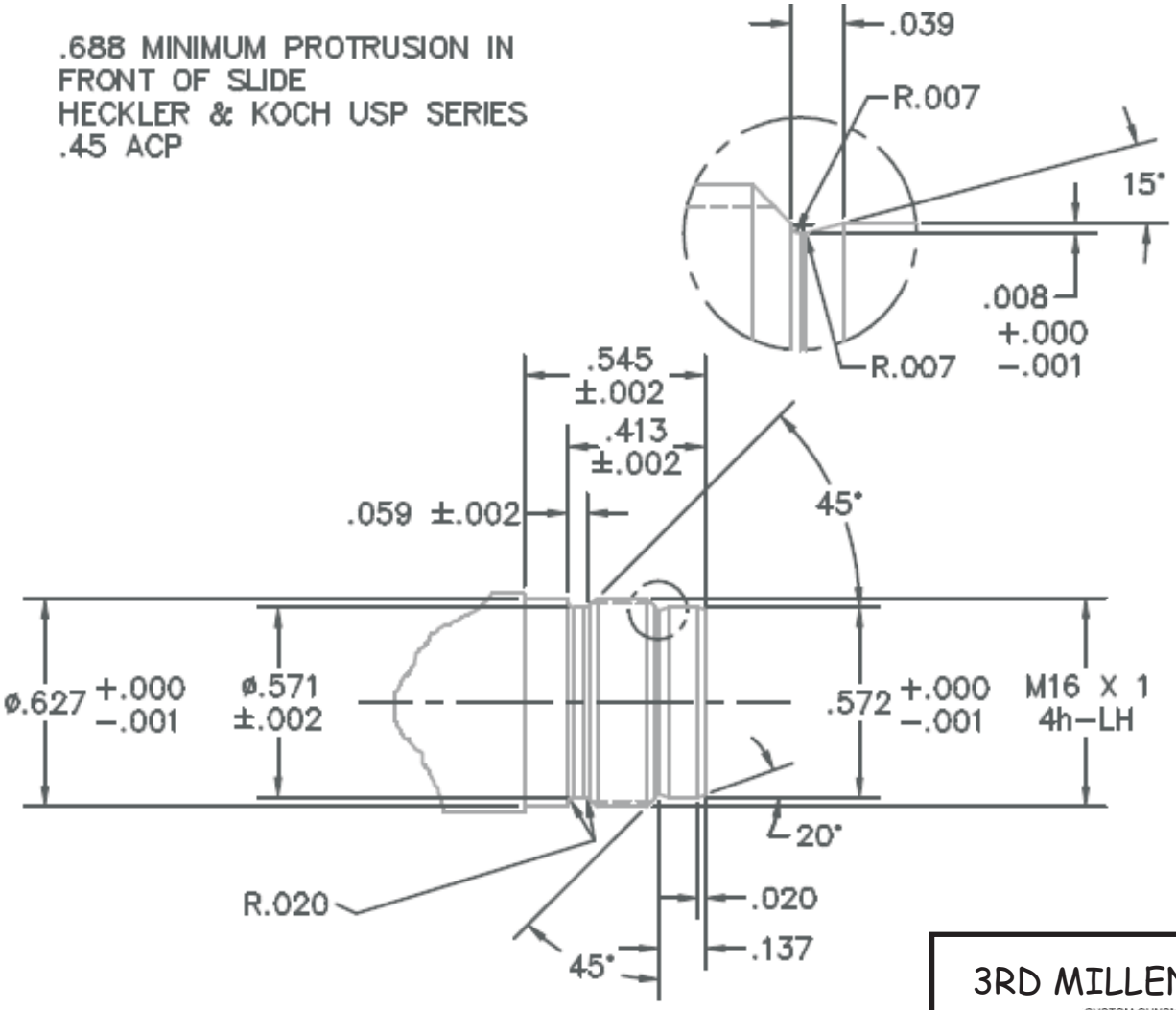

3RD MILLENNIUM ENGINEERIN

CUSTOM GUNSMITHING
3ME
3RD MILLENNIUM ENGINEERING, LLC
Worrying Sarah Brady since 1994

13425 W 56TH TE
SHAWNEE, KS 662
(913) 484-4436 ww

UNLESS OTHERWISE SPECIFIED
DIMENSIONS ARE IN INCHES
TOLERANCES
ANGLES ±0 30'0"
.XX DECIMALS ±0.01
.XXX DECIMALS ±0.005
PART SHALL BE FREE OF ALL BURRS

BROKEN EDGES ±0.005 MAX R
FILLETS ± 0.005 MAX R
SURFACE ROUGHNESS 125
CONCENTRICITY ±0.003

BARREL THREAD
SPECIFICATIO
M16 X 1 LEFT HA

COPYRIGHT © 2010 3RD MILLENNIUM
ALL RIGHTS RESERVED